EA-PSM Harmonic Load Flow verification validation case

Introduction

Verification validation cases are run before each EA-PSM version release. Calculation results are compared to Published Examples. In this document current and voltage harmonic distortions will be compared. The example is taken from IEEE Industry Application Society meeting approved paper Adjustable Speed Drive and Power Rectifier Harmonics – Their Effect on Power Systems Components by David E. Rice.

System Description

One line of typical system is used for harmonic voltage and current calculations (Fig. 1). The source of harmonic currents is static power converter connected to 5th bus. Its harmonic currents in percent of converter base amperes are presented in Table 1. The elements impedances are described in Table 2. Capacitance of lines are neglected.

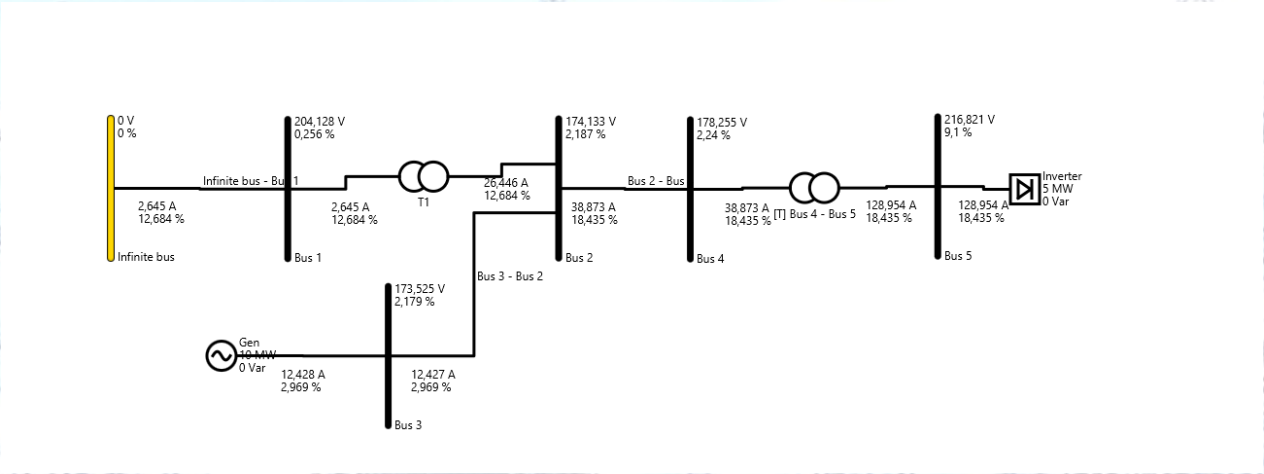

Fig. 1. Test network diagram

Table 1. Harmonic currents of power converter

Harmonic	Currents, %
5	15.83
7	8.95
11	2.83
13	1.77
17	1.24
19	1.04
23	0.62
25	0.51

MB Energy Advice
info@energyadvice.lt
Phone: +370 635 16380

K. Baršausko g. 59-436
LT-51423 Kaunas, LITHUANIA
Company code: 303038190
Acc. No LT984010042503106 51

Table 2. Elements impedances

From bus	To bus	R, Ω	X, Ω
0	1	1.26	12.63
1	2	4.32	95.12
2	3	0.00	0.01
0	3	0.07	2.29
2	4	0.02	0.02
4	5	0.19	2.28

Calculation Results

Harmonic load flow for described system is presented in following tables. Results from EA – PSM are rounded to two decimal places as it is done in reference as well.

Table 3. Voltage and current harmonics at bus 1

	Reference			EA - PSM			Difference		
Harmonics	**Voltage at bus 1, %**	**Current from bus 1 to bus 0, A**	**Current from bus 1 to bus 2, A**	**Voltage at bus 1, %**	**Current from bus 1 to bus 0, A**	**Current from bus 1 to bus 2, A**	**Voltage, %**	**Current, %**	**Current, %**
5	0.18	2.25	2.25	0.18	2.25	2.25	0.00	0.00	0.00
7	0.14	1.27	1.27	0.14	1.27	1.27	0.00	0.00	0.00
11	0.07	0.40	0.40	0.07	0.40	0.40	0.00	0.00	0.00
13	0.05	0.25	0.25	0.05	0.25	0.25	0.00	0.00	0.00
17	0.05	0.18	0.18	0.05	0.18	0.18	0.00	0.00	0.00
19	0.04	0.15	0.15	0.04	0.15	0.15	0.00	0.00	0.00
23	0.03	0.09	0.09	0.03	0.09	0.09	0.00	0.00	0.00
25	0.03	0.07	0.07	0.03	0.07	0.07	0.00	0.00	0.00

Table 4. Voltage and current harmonics at bus 2

	Reference				EA - PSM				Difference			
Harmonics	**Voltage at bus 2 %**	**Current from bus 2 to bus 1, A**	**Current from bus 2 to bus 3, A**	**Current from bus 2 to bus 4, A**	**Voltage at bus 2 %**	**Current from bus 2 to bus 1, A**	**Current from bus 2 to bus 3, A**	**Current from bus 2 to bus 4, A**	**Voltage %**	**Current, %**	**Current, %**	**Current, %**
5	1.53	22.53	10.60	33.12	1.52	22.53	10.59	33.12	0.65	0.00	0.09	0.00
7	1.21	12.74	5.99	18.73	1.21	12.74	5.99	18.73	0.00	0.00	0.00	0.00
11	0.60	4.03	1.90	5.93	0.60	4.03	1.90	5.93	0.00	0.00	0.00	0.00
13	0.44	2.51	1.18	3.70	0.44	2.51	1.18	3.70	0.00	0.00	0.00	0.00
17	0.41	1.76	0.83	2.59	0.41	1.76	0.83	2.59	0.00	0.00	0.00	0.00
19	0.38	1.48	0.70	2.18	0.38	1.48	0.70	2.18	0.00	0.00	0.00	0.00
23	0.27	0.88	0.41	1.29	0.27	0.88	0.41	1.29	0.00	0.00	0.00	0.00
25	0.24	0.72	0.34	1.06	0.24	0.72	0.34	1.06	0.00	0.00	0.00	0.00

Table 5. Voltage and current harmonics at bus 3

	Reference			EA - PSM			Difference		
Harmonics	**Voltage at bus 3 %**	**Current from bus 3 to bus 0, A**	**Current from bus 3 to bus 2, A**	**Voltage at bus 3 %**	**Current from bus 3 to bus 0, A**	**Current from bus 3 to bus 2, A**	**Voltage, %**	**Current, %**	**Current, %**
5	1.52	10.60	10.60	1.52	10.59	10.59	0.00	0.09	0.09
7	1.20	5.99	5.99	1.20	5.99	5.99	0.00	0.00	0.00
11	0.60	1.90	1.90	0.60	1.90	1.90	0.00	0.00	0.00
13	0.44	1.18	1.18	0.44	1.18	1.18	0.00	0.00	0.00
17	0.40	0.83	0.83	0.40	0.83	0.83	0.00	0.00	0.00
19	0.38	0.70	0.70	0.38	0.70	0.70	0.00	0.00	0.00
23	0.27	0.41	0.41	0.27	0.41	0.41	0.00	0.00	0.00
25	0.24	0.34	0.34	0.24	0.34	0.34	0.00	0.00	0.00

Table 6. Voltage and current harmonics at bus 4

	Reference			EA - PSM			Difference		
Harmonics	**Voltage at bus 4, %**	**Current from bus 4 to bus 2, A**	**Current from bus 4 to bus 5, A**	**Voltage at bus 4, %**	**Current from bus 4 to bus 2, A**	**Current from bus 4 to bus 5, A**	**Voltage, %**	**Current, %**	**Current, %**
5	1.56	33.12	33.12	1.56	33.12	33.12	0.00	0.00	0.00
7	1.24	18.73	18.73	1.24	18.73	18.73	0.00	0.00	0.00
11	0.62	5.93	5.93	0.62	5.93	5.93	0.00	0.00	0.00
13	0.45	3.70	3.70	0.45	3.70	3.70	0.00	0.00	0.00
17	0.42	2.59	2.59	0.42	2.59	2.59	0.00	0.00	0.00
19	0.39	2.18	2.18	0.39	2.18	2.18	0.00	0.00	0.00
23	0.28	1.29	1.29	0.28	1.29	1.29	0.00	0.00	0.00
25	0.25	1.06	1.06	0.25	1.06	1.06	0.00	0.00	0.00

Table 7. Voltage and current harmonics at bus 5

	Reference		EA - PSM		Difference	
Harmonics	**Voltage at bus 5, %**	**Current from bus 5 to bus 4, A**	**Voltage at bus 5, %**	**Current from bus 5 to bus 4, A**	**Voltage, %**	**Current, %**
5	6.31	109.88	6.34	109.88	-0.48	0.00
7	5.00	62.14	5.02	62.14	-0.40	0.00
11	2.49	19.67	2.49	19.67	0.00	0.00
13	1.83	12.26	1.84	12.26	-0.55	0.00
17	1.68	8.61	1.69	8.61	-0.60	0.00
19	1.58	7.22	1.58	7.22	0.00	0.00
23	1.13	4.27	1.13	4.27	0.00	0.00
25	1.01	3.52	1.01	3.52	0.00	0.00

Reference: D. Rice Adjustable Speed Drive and Power Rectifier Harmonics – Their Effect on Power Systems Components, IEEE Transactions on industry applications, VOL. IA-22, NO. 1, JANUARY/FEBRUARY 1986